Installation Guide for VintageTx GTA and GTB Encoder Boards

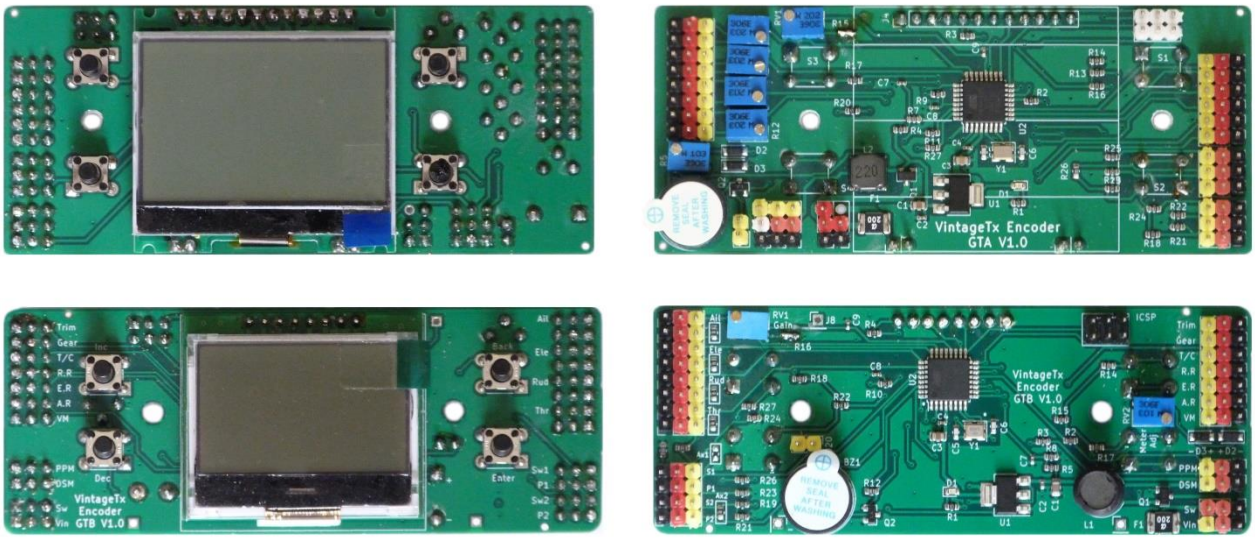

Introduction

The VintageTx GTA and GTB encoder boards have been designed to convert vintage R/C transmitters to 2.4GHz with full computer functionality. The LCD display and menu keys are hidden behind the original manufacturer's label that is held on with magnets, so in normal use it looks like a standard conversion, but remove the label and a full computer transmitter is revealed. Conversions are straightforward and well within the capabilities of most modellers.

Contents

Specification

- 8 channels
- LCD 128x64 graphics display with LED backlight and 4 programming switches
- 10 model memories
- 10 character model names
- Auto-trim setting on Aileron, Elevator and Rudder via a pushbutton (buddy-box switch)
- Trim memories on Aileron, Elevator, Rudder and Throttle tick-over
- Separate inputs for electrical trims as found on many sets with open gimbal sticks such as Kraft, Pro-Line etc.
- Sub trims on all output channels
- End point adjust on all output channels
- Dual Rates and Expo on Aileron, Elevator and Rudder
- Servo Reverse on all output channels
- Freely configurable output order/assignment for all channels
- 8x programmable free mixes (Pmix)
- "Servo slow" on any channel as a Pmix option, adjustable from 0 to 10 seconds
- Elevons (delta and flying wing) mix
- V-tail mix
- Aileron to rudder mix (coupled aileron/rudder)
- Aileron differential mix
- Throttle Curve Mix
- Single channel compound escapement emulation with optional 2 or 3 position blip throttle and optional kick up (or down if preferred) elevator
- Single channel sequential escapement emulation with optional beeps to indicate next direction
- Up and Down timers that can run independently of each other
    - Up timer (selectable on rudder rate, throttle cut or gear switch)
    - Down timer with countdown alarm (adjustable on/off as % of throttle joystick position or rudder rate, throttle cut or gear switch)
- Operation from 6.0V to 12.0V to suit 2S Lipo or Li-Ion, 2S/3S LiFe and 6S-8S NiMH. If using 2S LiFe ensure the 2.4GHz module will operate at 6.2V, their usable minimum.
- Digital voltage read-out with low battery alarm (adjustable to suit the battery used)
- Output for the existing meter with trimmer adjustments to give full scale meter at the nominal maximum battery voltage to suit most brands
- Inactivity alarm (adjustable1-15 minutes)
- Throttle Lock with arm/reset. On power-up or when a different model memory is selected, the transmitter will output closed throttle until the joystick has been closed to reset/arm.
- Two Throttle Cut modes: Throttle Cut and Throttle Limit.
    - Throttle Cut mode operates when the switch is active
    - In Throttle Limit mode, when the switch is operated, the throttle will not go beyond point, so I/C models can be safely carried out to the patch without worry if the throttle joystick is inadvertently opened, the motor will not go past the limit.
- The throttle joystick can be "swapped" with Aux1, Aux2 or the Gear switch. This is used when flying powered gliders so that what would be the throttle joystick for a powered aircraft can be used for flaps/spoilers/crow and the motor controlled by the Aux1, Aux2 or the Gear switch, with the throttle reset/arm, throttle cut and countdown timer still working
- Alarm if the trims are not centred at start up or a different model is selected
- Tested with the following 2.4GHz modules: FrSky™, LemonRx™, OrangeRx™, Spektrum™ DM8, DM9 (case removed), Jumper 4IN1 Multi-protocol (case removed), Jeti™ TU and Futaba™ TM-7 and TM-8 (case removed).

Typical VintageTx Converted Transmitter Layout

Figure 1. VintageTx Converted Transmitter Features (I)

Figure 2. VintageTx Converted Transmitter Features (II)

What's Included with the VintageTx Encoder?

The VintageTx encoders come with some accessories that modellers may not have in their spares box and saves them having to find small quantities of fixings, jumpers and magnets. Some other materials will be needed, such as 1/32" ply, cyanoacrylate and contact glue, servo leads, solder etc that most modellers will have so are not supplied. These additional items can be supplied as an option at the time of purchase.

VintageTx Encoder Board

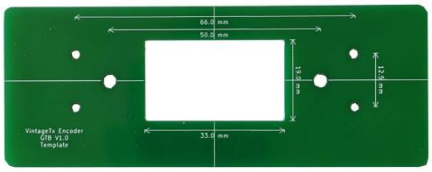

VintageTx cutting/drilling template

VintageTx 2.4GHz module-mount

2x M3 x 30mm nylon countersunk screws

2x M3 x 8mm hex nylon stand-off/spacers

2x M3 15mm hex nylon stand-off/spacers

2x M3 10mm male/female nylon stand-off/spacers

2x M3 nylon nuts

0.1" header jumper links

2x 10mm diameter x 1mm magnets
2x 4mm diameter x 1mm magnets

Clear self-adhesive menu key labels (white labels available for dark coloured Tx)

Planning the Installation

Figure 3. Typical Switches fitted to a Transmitter

Before starting the conversion, decide what switches and auxiliaries are being fitted. Some people prefer a fully loaded transmitter with rate/expo switches, throttle cut switch, gear switch and 2x auxiliary sliders. Others prefer no additional switches from original, with this configuration you can still dial in expo and reduced rates, just not dual rates/expo. If additional switches are going to be fitted, plan where they will fit at this stage, as some transmitters are very limited where additional switches will fit and be convenient to use.

There are two options for the auxiliary channels, either pots'/sliders or 3 position switches, the board has the resistors already fitted for the 3-position switches. Aux2 can be used to switch mixers, so the ideal combination is Aux1 on a pot'/slider and Aux2 as a 3-position switch, but either combination will work.

Figure 4. Typical Battery

Another consideration should be batteries and where they will fit, there isn't much room left in some transmitters when the encoder board is fitted. If a small 450-500mAH Lipo is used, they are light enough to mount above the encoder board on the underside of the "rf-module mounting board", if other batteries are being fitted, they will need to go to the side or above the encoder board.

Finally you need to decide what 2.4GHz module will be used and plan where it will be installed. The encoder boards are compatible with many 2.4GHz modules and have been tested with the following 2.4GHz modules:
FrSky™ XHT, DHT, V8HT, LemonRx™ DSMP-DIY, OrangeRx™ DIY, Spektrum™ DM8, DM9 (case removed), Jumper 4IN1 Multi-protocol (case removed), Jeti™ TU and Futaba™ TM-7 and TM-8 (case removed).

The encoder will operate from 6.0V to 12.0V so suitable batteries include 2S Lipo or Li-Ion, 2S/3S LiFe and 6S-8S NiMH. If using 2S LiFe ensure the 2.4GHz module will operate at 6.2V, their usable minimum.

Using the Cutting/Drilling Template to Ensure the Encoder Board will Fit

Figure 5. Ensuring the Encoder board will fit your transmitter. Remember to check inside the case too to clear auxiliary leavers and joysticks.

The GTA and GTB boards will fit many popular transmitters, but will not fit every transmitter, some such as the popular Futaba M6/FP-6FN and Pro Line ranges have small labels that wouldn't cover the LCD and menu switches and there are dedicated boards for these models with a smaller LCD and menu switches closer together (GTF and GTP respectively). And others have no label, such as those screened printed, there is the GTB-R encoder which has a rear facing LCD and menu keys, that can be used for transmitters with easy to remove rear covers.

You can print out a PDF template (download on the vintagetx.co.uk website) to ensure it will fit your selected transmitter or alternatively if you already have the board, use the drilling/cutting template. Test fit inside and the front of the transmitter, remembering that the board will be mounted on 8mm stand-offs, not directly against the case.

Marking the Position of the Manufacturers Label

Figure 6 Mark the position of the manufacturers label with tape

Mark the position of the manufacturers label with tape so that it can be easily mounted back in its original position, it is surprisingly difficult to do without marking unless you have another similar transmitter.

Removing the Manufacturers Label

Figure 7. Removing the Label is probably the most difficult job...

The next job is probably the most difficult of the entire conversion and for some transmitters that have foil labels such as Kraft, it is near impossible to remove without damage. Replacement labels for most “made in USA” transmitter such as Kraft, Pro Line,EK Logitrol and Orbit are available from Cal Orr in the USA. Alternatively drawn the artwork in Photoshop and print your own on “foil effect” label material.

For labels made of thin alloy such many from Futaba, Skyleader, Digi-Fleet, EK-Logitrol and Orbit lift the corner with a sharp long-bladed craft knife and then extend the blade and using a gentle sawing action and not forcing the blade, cut through the contact adhesive (the tape will help protect the case from the knife blade). Once the label is off, removing the old glue from the case and label. Do not use strong solvents as it is likely to remove the ink from the label too. Plastic scrapers or finger nails are usually the best tools.

Marking the position of the Encoder Board

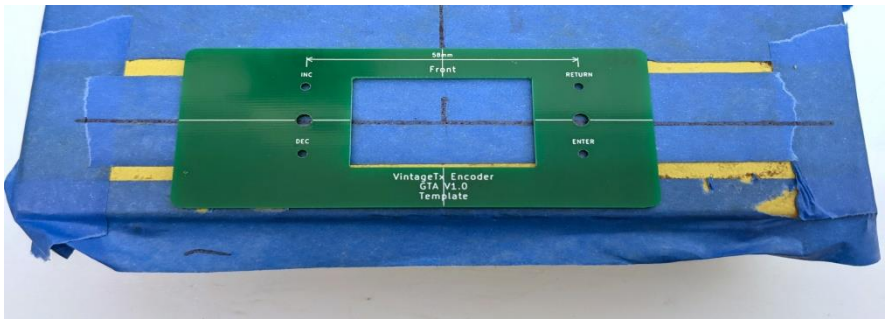

Figure 8. Marking the position for the template

Mark the position where for the template, in the example the GTA encoder cutting/drilling template is being mounted a few mm below the centre of the label so that it clears the auxiliary lever above.

Drill the Pilot Holes for the Menu Key and Cut the LCD Aperture

Figure 9. The M3 holes have been drilled ready to temporarily screw to the front

The encoder board cutting/drilling template is temporarily mounted using the two M3 holes used for mounting the encoder, so these holes need to be drilled first. Once the 2x M3 mounting holes have been drilled, offer the template to the mounting holes inside the transmitter, to double check the encoder board will fit inside, then screw the template to the front with M3 nylon screws/nuts to keep it firmly in place while drilling the pilot holes for the menu switches and cutting the aperture for the LCD. The menu switch holes need to be a minimum 6mm diameter and ideally 8mm to 10mm diameter, but ensure the holes will be covered by the label when fitted – don't drill 10mm holes just to find they extend above/below the label as it will spoil the look.

Cutting the LCD aperture can be done in a number of ways, one method is to drill three overlapping holes with a hole-saw cutter large enough for a metal file to remove the rest of the material and finish off with a small square metal file to the edge of the template.

Figure 10. The finished LCD aperture with the screws used to hold it in place already removed

Countersink the Mounting Holes and Drill all other Holes

Figure 11. Holes marked for the label "Hold-On Magnets" and the rates/expo Switches

The 3mm holes need to be countersunk so the M3 countersunk screws will be flush with the case so the label will fit flat on the case. Use a metal cutting countersink bit or if one is unavailable use a 90° HSS 8mm (5/16) drill bit, their chamfer angle is near enough the required 90° – just be careful not to open the hole beyond 3mm. The M3 screw heads are 7.5mm diameter, so should fit just below flush, they must not be raised otherwise the label will not sit flush.

Next drill the Holes for the Label "Hold-On Magnets". The small magnets are 4mm diameter (5/32"), so drill 4.5mm (3/16"). Also drill any other holes needed for rates/expo switches, gear switches, throttle-cut switches and/or 3-position switches before the display is mounted.

Fixing the Label Back on the Transmitter

It's suggested that the label is completed at this stage as it's easier to glue the magnets before the encoder board is fitted.

Gluing the Magnets to the Case

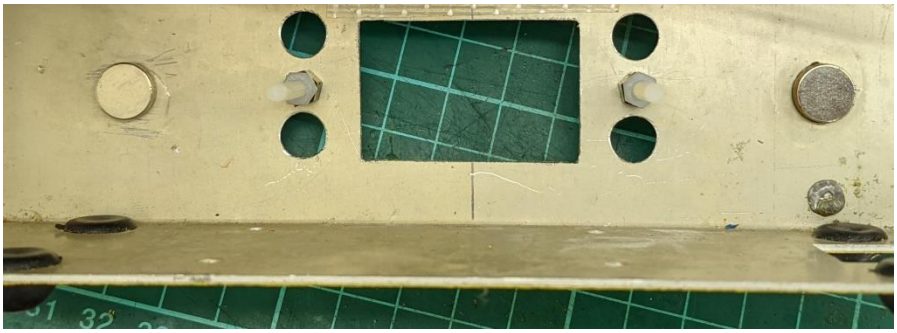

Figure 12. The 10mm magnets glued to the Case over the 4.2mm Holes

The 10mm magnets need to be glued to the case centrally behind the 4.2mm holes with standard cyanoacrylate glue. Epoxy can be used, but extreme care needs to be taken that none ingress into the 4.2mm hole, as the 4mm magnet on the label needs to fit into the hole and nearly touch the other magnet. These magnets must be fitted before the magnets on the label, so that the label magnets can align themselves correctly with the case magnets (north and south poles).

Backing the Label with Ply

Figure 13. The Manufacturers Label with 0.8mm Ply Cut to the Same Size

Next cut some 0.8mm (1/32") ply to the exact same size as the label and glue it to the label to stiffen it. All the prototypes used UHU POR contact adhesive, but thin epoxy would work just as well.

Gluing the Magnets on the Label

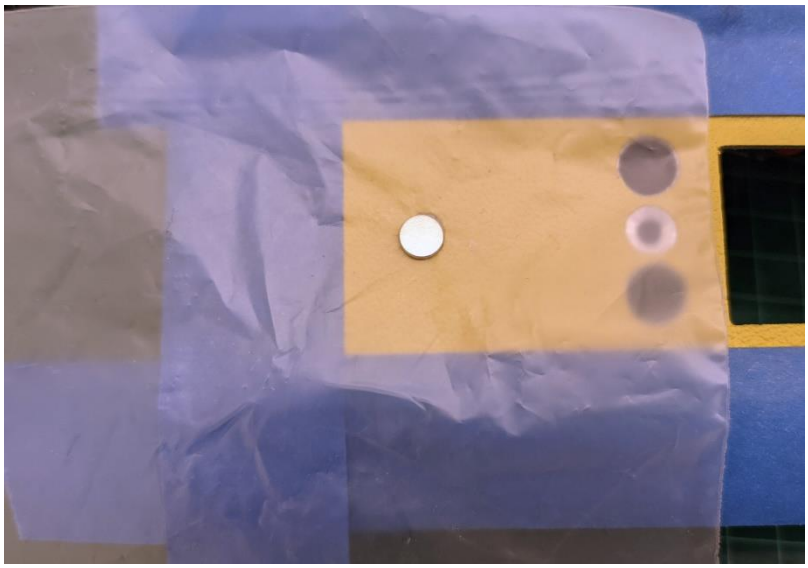

Figure 14. Magnet Spaced with thin Polythene

The 4mm magnets are approximately 1mm thick (manufacturing tolerances +/- 0.1mm) and a typical transmitter case is 1.2mm to 1.4mm, so the label magnets need to be temporarily raised, so they sit proud of the case to be glued. If a thin sheet of polythene (such as the backing off Oracover film covering) is placed over the 4.5mm hole and the 4mm magnet placed on top, it will align itself to the 10mm magnet, but will still sit proud. Use a very small amount of cyanoacrylate or epoxy glue on the tops of the 4mm magnets, then carefully place the label on top (using the masking tape to accurately align) and allow to the glue to set. The polythene sheet (or bag) then acts to protect the case from any excess glue.

Figure 15. 4mm Magnets glued to the Label

You should then finish with a label that will hold on to the case with enough magnetic force that it will not fall off in normal handling, but is easy to remove. Note that the 10mm and 4mm magnets should not be quite touching as the case is just over 1mm thick (1.2 – 1.4mm) and the magnet 1mm. Do not allow the magnets to touch, the label can become difficult to remove.

Mounting the Encoder Board

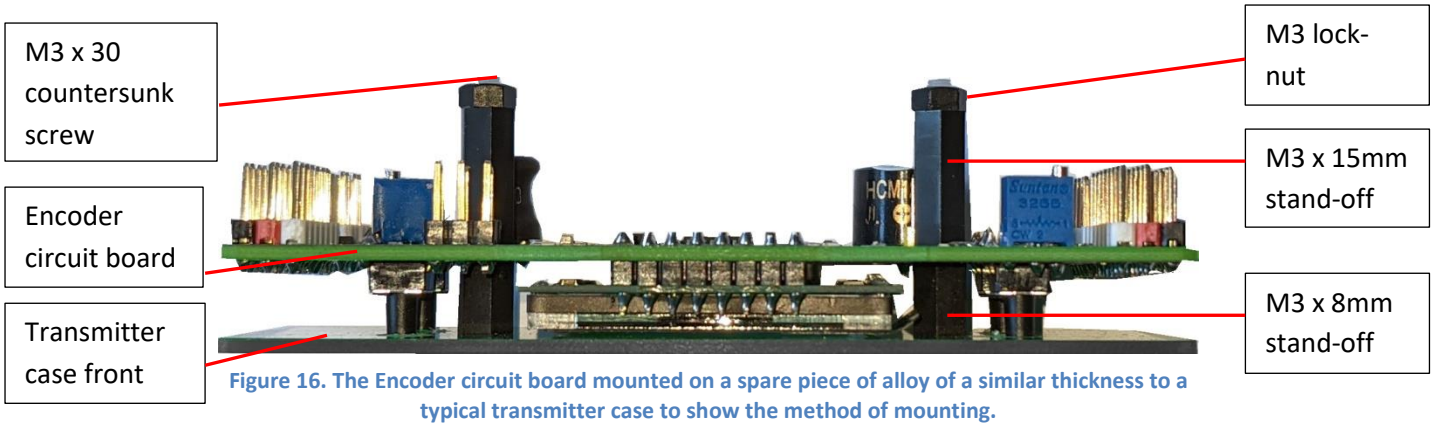

Figure 16. The Encoder circuit board mounted on a spare piece of alloy of a similar thickness to a typical transmitter case to show the method of mounting.

The encoder board is mounted from the front of the transmitter case on two M3 x 8mm threaded stand-offs threaded onto two M3 x 30mm nylon screws and then held down with M3 x 15mm stand-offs as "long" nuts and then M3 lock-nuts, as shown above. The reason for the M3 x 15mm "long nuts" is that they can be tightened without a spinner needing to be too near the circuit board.

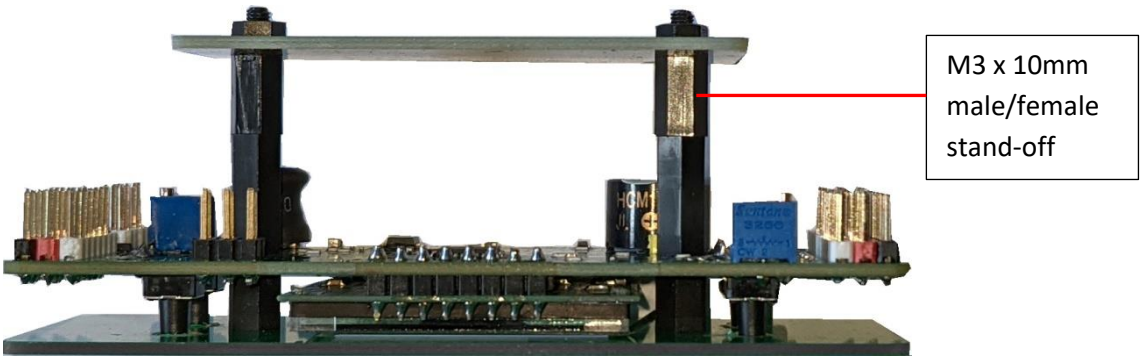

Figure 17. Optional 2.4GHz Module Mount, on M3 x 10mm stand-off to give clearance for a small lipo battery underneath (15mm clearance of components)

The VintageTx encoders can take up much of the free space in a transmitter conversion, so an optional "rf module mount" is provided, to mount the 2.4GHz module and optionally a very small 2S Lipo battery up to around 450-500mAH. If just the 2.4GHz module is to be used, it can be mounted directly on top of the M3 x 15mm stand-offs, but if a 2S lipo is to be mounted on the bottom of the mount, it needs to be extended by an m3 x 10 male-female stand-off to give the battery clearance above the encoder board (14mm clearance in total).

You may wish to stick some 0.5mm styrene "plasticard" on the inside of the case where the LCD soldered connections are to insulate the case in case the LCD should touch, or the whole footprint of the encoder board to insulate the case.

It may seem that mounting the board on just two mounts is inadequate, it has been found over many prototypes to be more than adequate and it gives greater flexibility to the different brands of transmitters it will fit. One of the prototype conversions was accidentally "drop-tested" from a bench onto concrete from 1.0m up and the case was dented and a joysticks broken, but the encoder board and the rf-module and battery on the mount above stayed on their stand-offs. Therefore there is no need to try to modify it.

GTA Encoder Board Connections

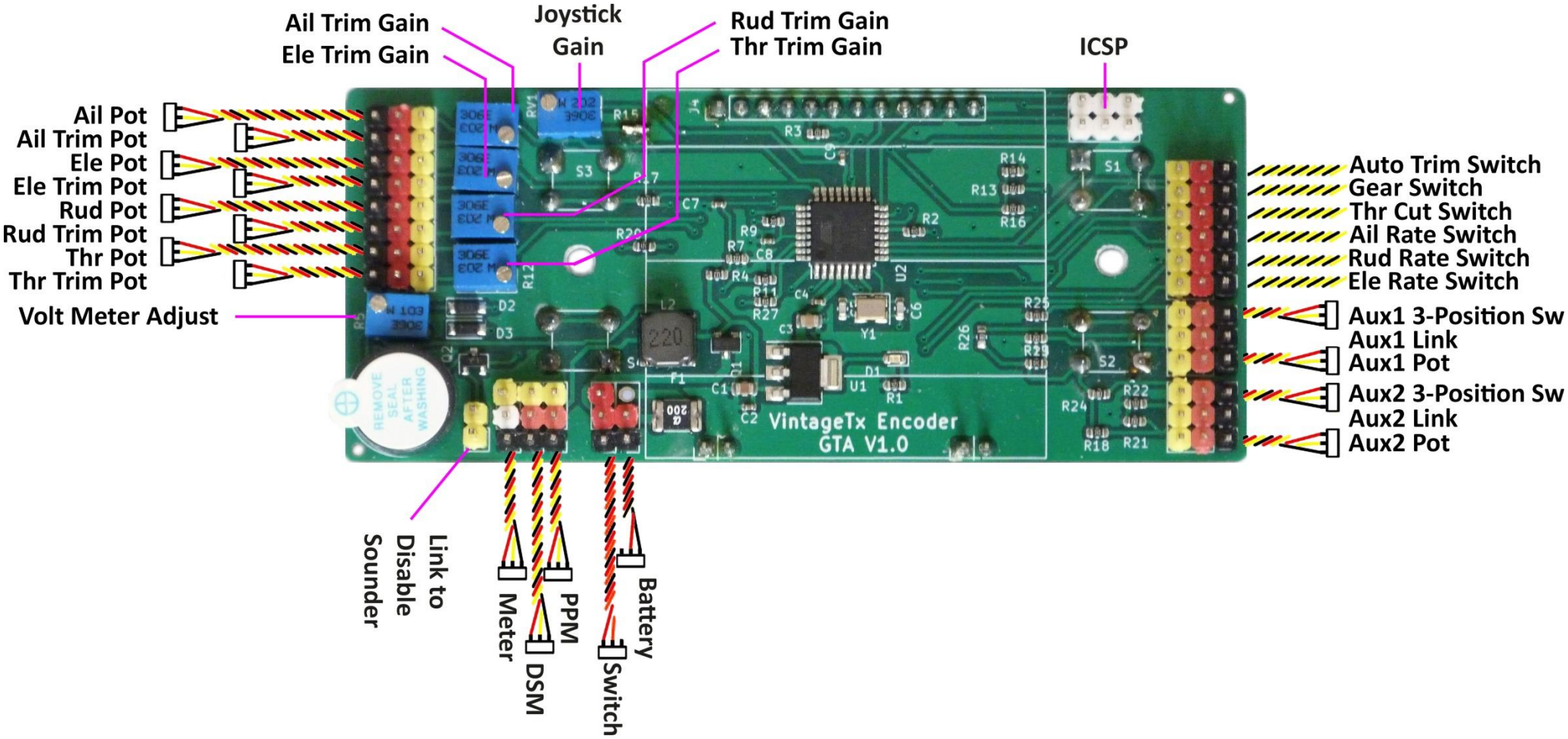

GTB Encoder Board Connections

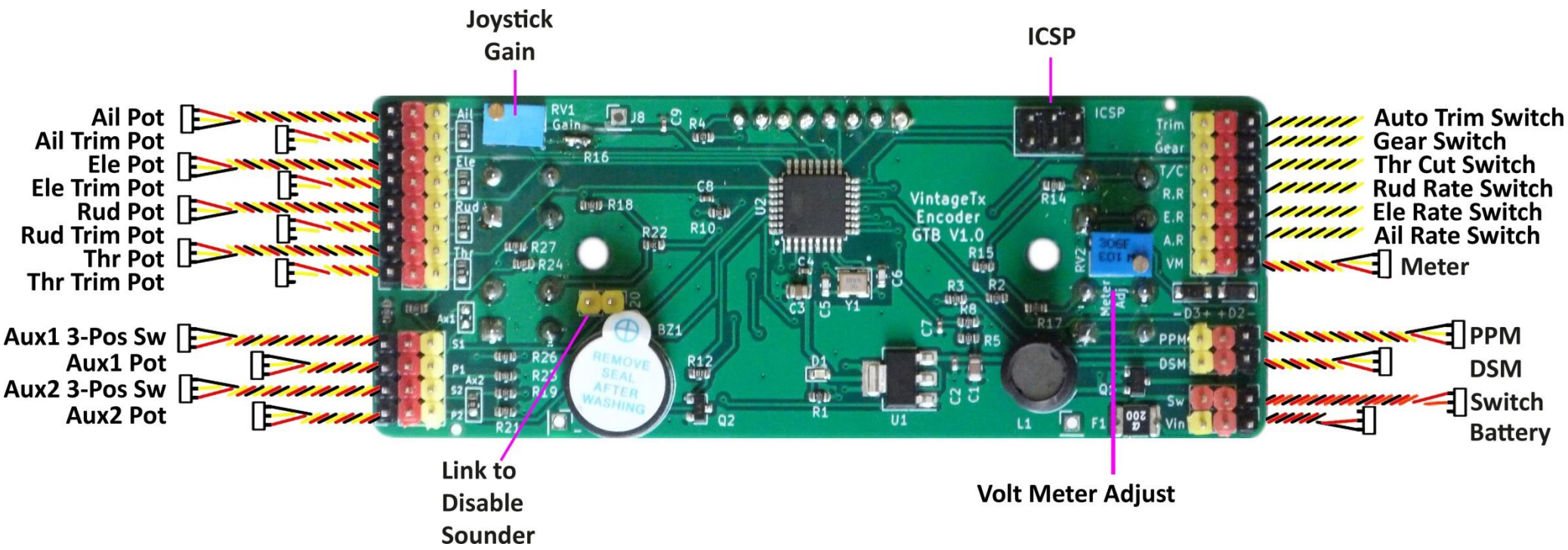

Battery and Switch Connections

GTA Encoder

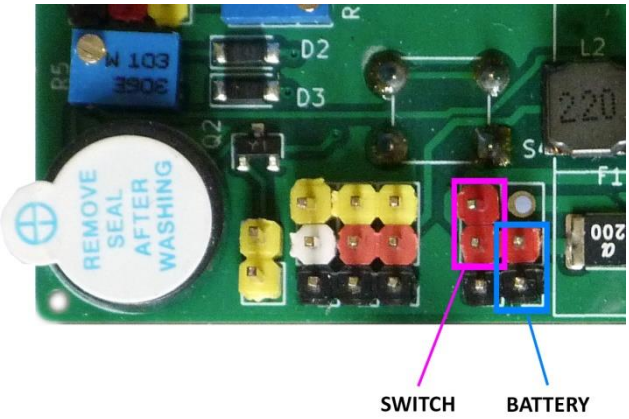

Figure 19. GTA Battery and Switch Connections

Figure 18. Do not use a JST directly onto the Encoder Battery Connection

GTB Encoder

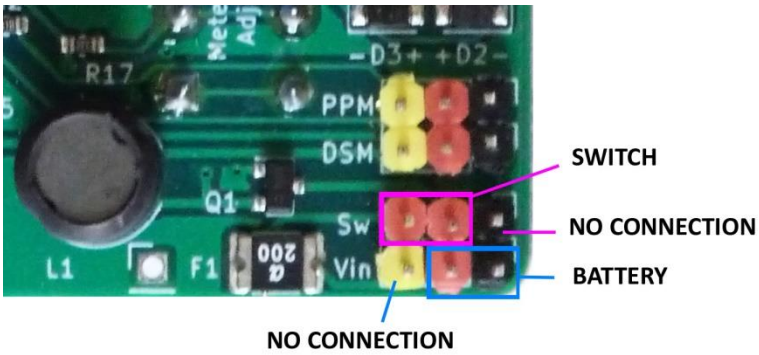

Figure 21. GTB Battery and Switch Connections

Figure 20. Do not use a JST directly onto the Encoder Battery Connection

Please use a Futaba/JR style "servo" connectors for all connections on the encoder boards, including the battery connection. **DO NOT** use a red JST RCY connector directly onto the circuit board – they don't fit properly! The JST RCY pins and sockets are slightly larger than standard headers pins, so while it may work, it will be a lose connection that could easily fail in the future. Also the plastic polarity orientation lugs will foul the switch connector. If the battery has a JST connector, change it with a servo type connector, a simple task that could save problems later.

Wire the battery directly to the encoder board, there is an on-board self-resettable fuse and reverse polarity protection to the black/red battery header. The third header pin may not be fitted, or if fitted there is no connection. The switch is wired directly to the encoder board onto the two red or red/white header, there is no connection to the black switch header.

Check the Encoder Board is Mounted Correctly

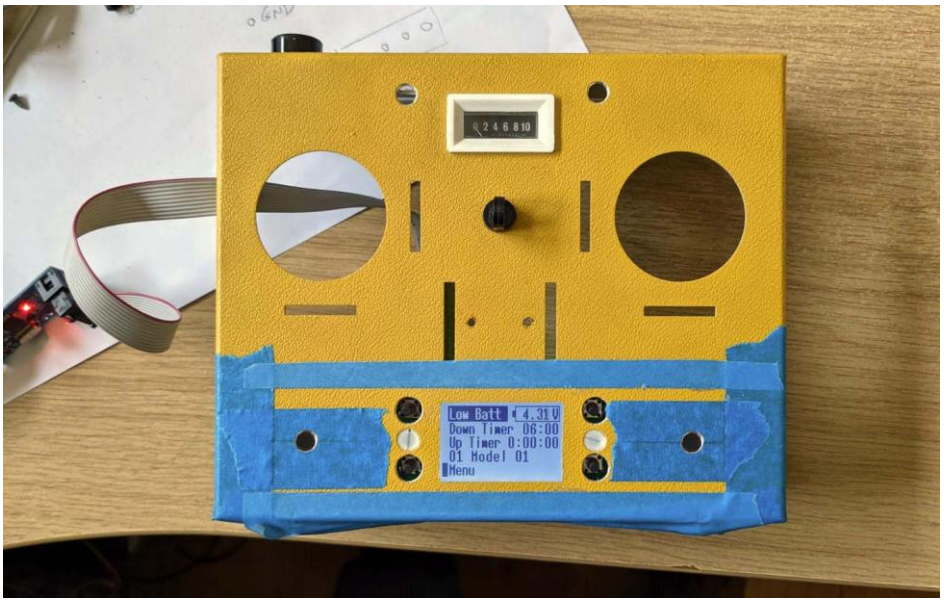

Figure 22. Encoder board temporarily powered up to check it sits correctly

Once the encoder board has been mounted, it can be temporarily powered up to make sure it's been mounted correctly with the display all visible and straight and that all the menu keys operate freely without binding on the holes in the transmitter case.

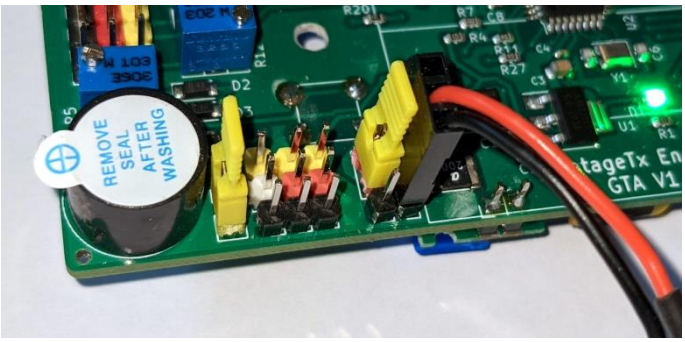

Figure 23. GTA Encoder Board

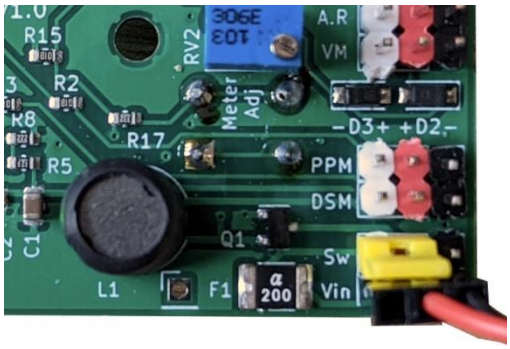

Figure 24. GTB Encoder Board

Connect the battery to the battery terminal and as the switch is not yet wired, fit a temporary "jumper" to the switch terminals as shown above.

Alternatively, if you have access to an ICSP programming lead such as an USBASP, this can conveniently be used, connected to the ICSP header.

The encoder may "beep" and the LCD display an alarm message, this is quite normal with nothing else connected.

Joystick Connections

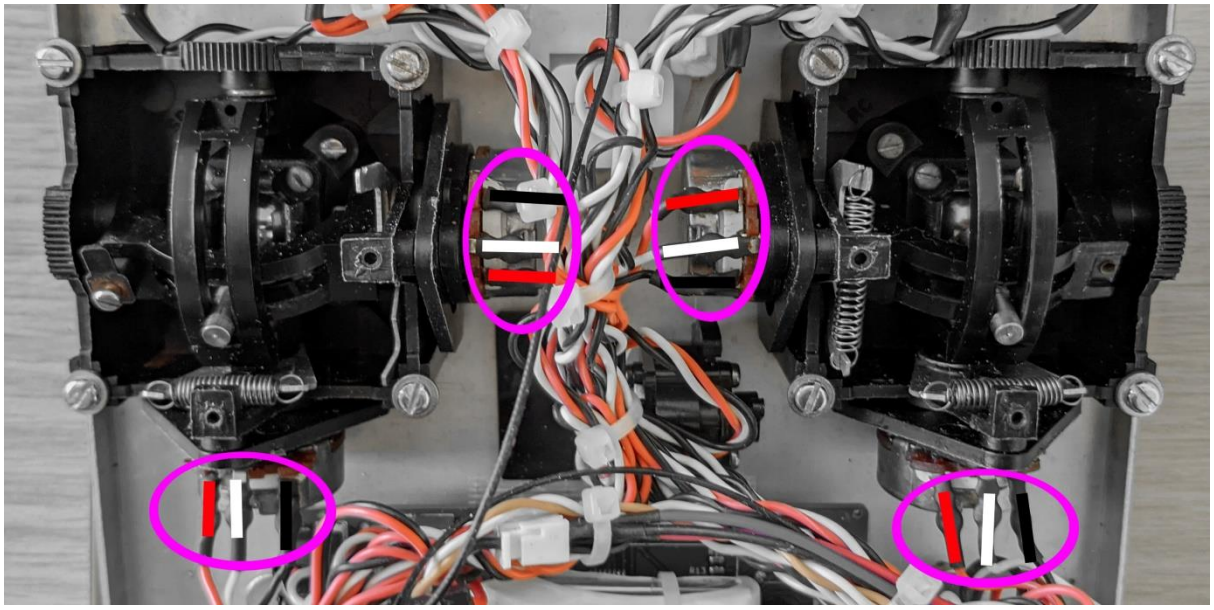

Figure 25. Potentiometer wiring for the Four Primary Controls

The correct wiring of the joystick potentiometers is very important and while the encoder will work with the red/black wires swapped, the throttle lock may not work correctly, the direction of the controls will be different to described in the user manual but more importantly, it may limit the "joystick gain" and therefore the available resolution. For the majority of transmitters the above wiring order should be able to be replicated. There are a few transmitters that have the potentiometers placed on the outside or top, for these contact support for suggested wiring. Note that both mode 1 and mode 2 transmitters should both be wired as above.

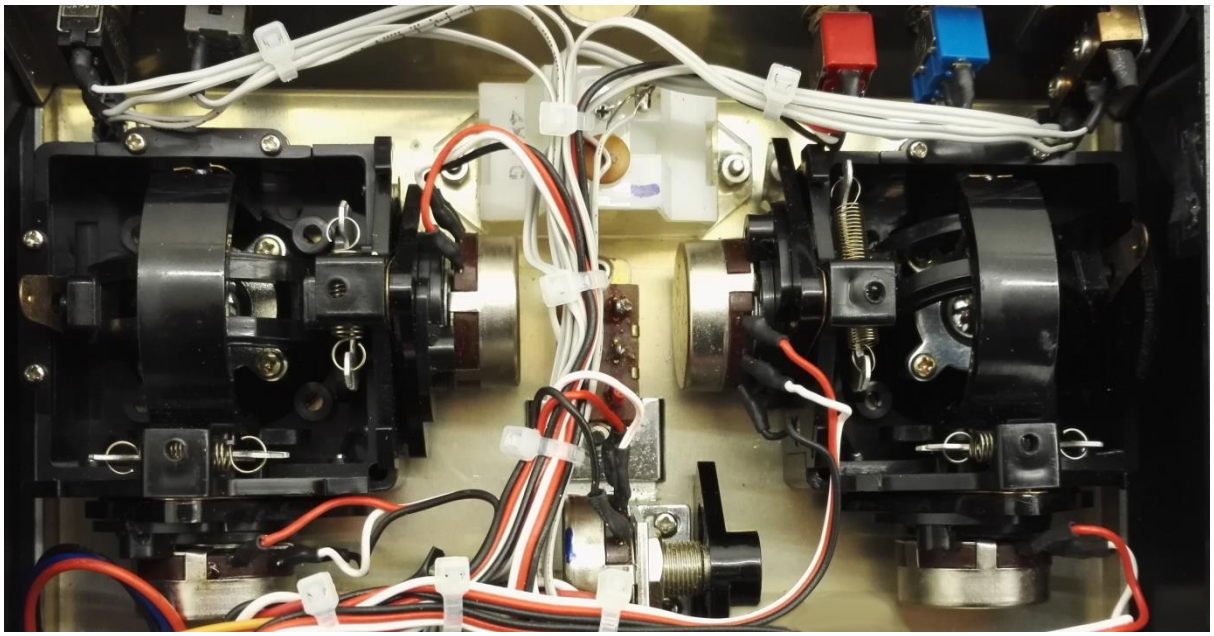

Figure 26. The Joystick Potentiometer wiring for a Futaba Conversion for Comparison

Joystick Connections to the Encoder Boards

The encoder boards have been designed to use standard servo leads and connectors, but it's quite acceptable to loop the 5V and Ground (red and black) from one joystick to another and just connect the potentiometer signals back individually.

Encoder boards will have been fitted with either white or yellow joystick potentiometer signal headers, this is due to availability of the headers and are electrically identical.

GTA Encoder Board Joystick Potentiometer Connections

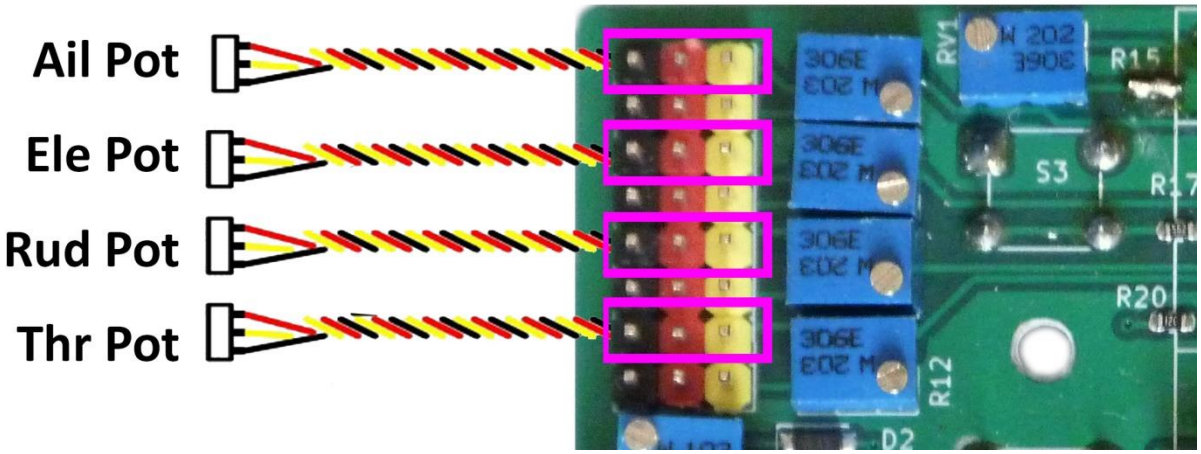

Figure 27. GTA Encoder Board Joystick Potentiometer Connections

GTB Encoder Board Joystick Potentiometer Connections

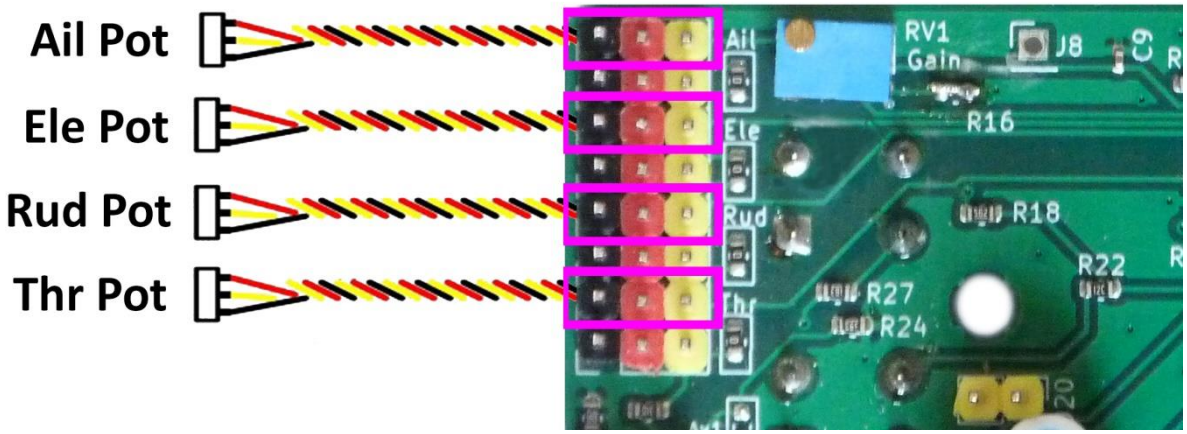

Figure 28. GTB Encoder Board Joystick Potentiometer Connections

Separate Joystick Trim Pots

Some transmitters, especially from the late '70s and early '80s used a separate potentiometer for the trims, rather than the trim mechanically moving the joystick potentiometer. Some had four additional potentiometers for each primary channel, others used separate pots' for just the throttle and elevator and used the traditional trim method for the ailerons and rudder. The GTA and GTB encoder boards both have provision for separate trim potentiometers, but the way they work is very different to each other, so has to be covered separately.

GTA Encoder

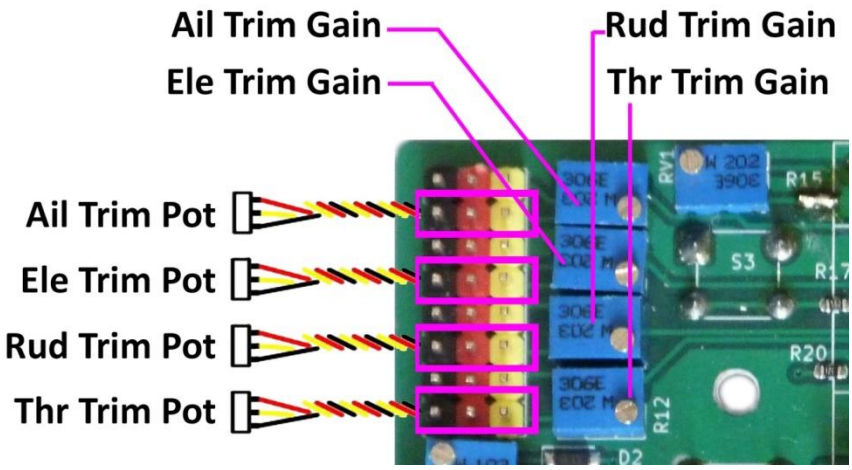

Figure 29. GTA Trim Potentiometer Connections

The GTA encoder board trim potentiometers are wired the same as the joystick potentiometers, if they are both in the same orientation (ie same side of the joystick). If the trim potentiometer is facing the opposite way to the joystick potentiometer, then the red/black will need swapping over on the potentiometer to get the trim working in the correct direction.

Each trim has a "gain adjustment pot'" (how much effect moving the trim has on the output) and is individually adjustable, fully clockwise gives the maximum trim authority (in some cases nearly equal to the joystick) , fully anti-clockwise will make the trims have little authority.

GTB Encoder

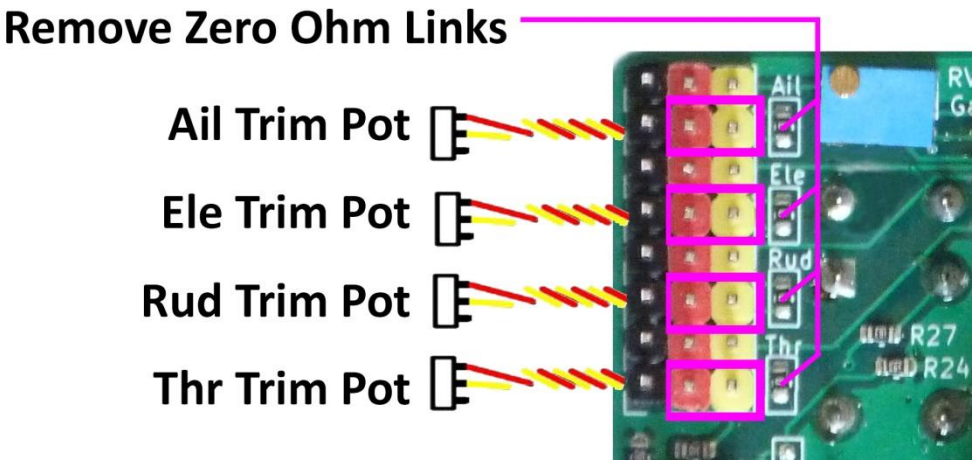

Figure 30. GTB Trim Potentiometer Connections

If separate trim potentiometers are used with the GTB Encoder boards, zero-ohm links need to be removed with a fine pointed soldering iron for the relevant channels (the position of zero-ohm links are shown in above).

Unlike the main joystick potentiometers, only two connections are used to each trim potentiometer, the red and yellow (white on some boards), there is no connection to the black trim terminal. The red and white/yellow connectors need to be connected the same as the main joystick potentiometers if they are both in the same orientation (ie same side of the joystick). If the trim potentiometer is facing the opposite way to the joystick potentiometer, then the red will need swapping over onto the other end of the potentiometer to get the trim working in the correct direction.

For those interested, the actual wiring is shown in Figure 30 below. As can be seen, when mechanical trims are used (no separate trim pot), the +5V joystick header is connected to +5V via the zero ohm link (0R), when a separate trim potentiometer is used, the zero ohm link needs to be removed (de-soldered) and the joystick 5V header is fed via the trim potentiometer and therefore the neutral point.

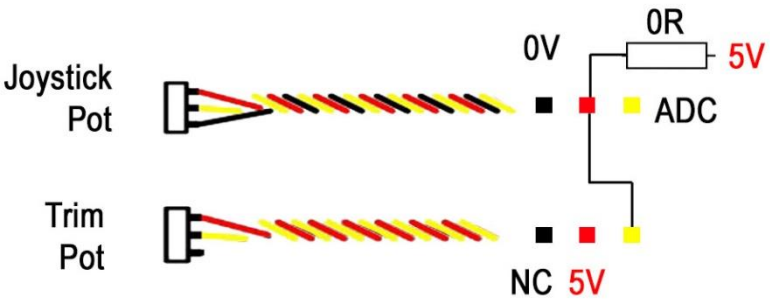

Figure 31. GTB Trim Schematic

Aux1 and Aux2 Channels – Either Potentiometers (Lever/Knob) or 3-Position Switches

The Aux1 and Aux2 auxiliary channels can be either potentiometers (sliders/lever/knobs), 3- position switches or one of each, it depends on the transmitter being converted and the how the transmitter will eventually be used.

If the set to be converted is 6-channel then Aux1 as a pot' and Aux2 as a 3-position switch is the obvious choice. If a 7-channel set is to be converted then the choice is not so easy. The obvious choice is two pot's, but as Aux2 can be used to switch various mixers, a good combination is Aux1 on a potentiometer slider/knob/lever and Aux2 as a 3-position switch, but any combination will work for both Aux1 and Aux2.

GTA Encoder

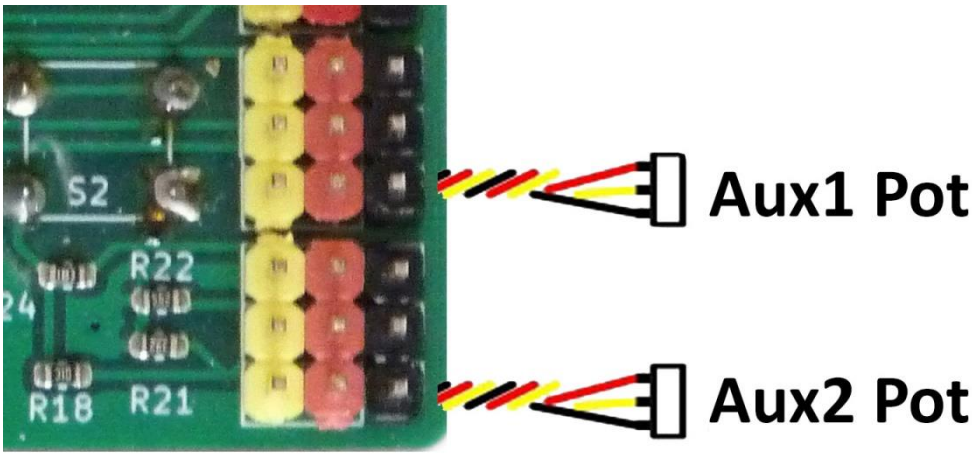

Figure 32. GTA Aux1 and Aux2 Connections for Potentiometers

If Aux1 and Aux2 use potentiometers (slider/lever/knob), connect up the same as the joysticks.

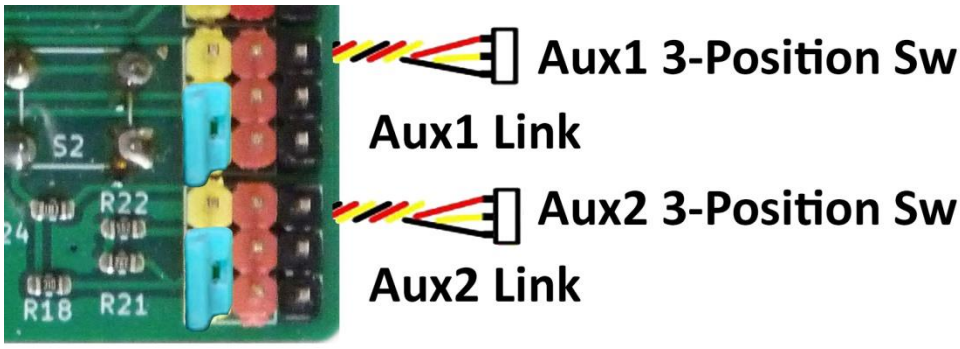

Figure 33. GTA Aux1 and Aux2 Connections for 3-Position Switch

If 3-Position switches are used, no additional resistors are required as they are already fitted on-board the encoder. The while/yellow goes to the switch common (typically the centre terminal) and the red and black to the switch contacts. A 0.1" (2.54mm) jumper connector needs to be connected as shown in Figure 32 above (sky blue jumper shown, but the colour of the one supplied may differ).

GTB Encoder

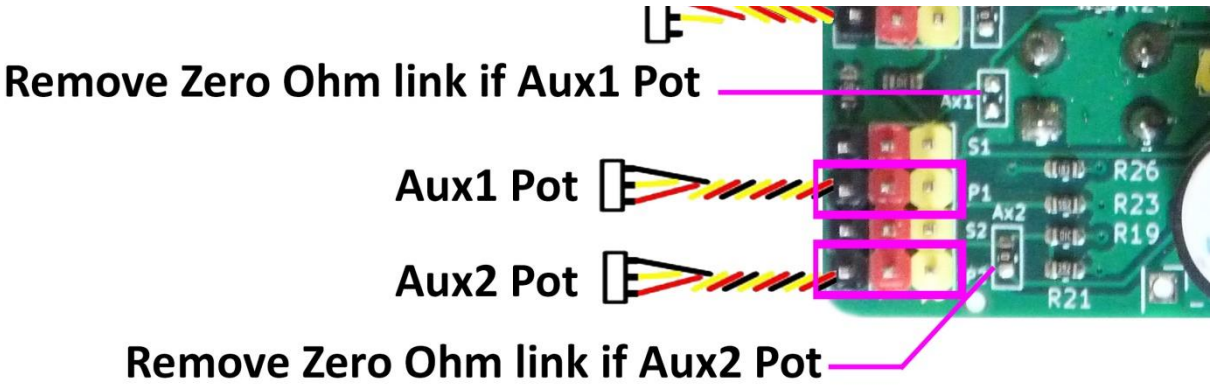

Figure 34. GTB Aux1 and Aux2 Connections for Potentiometers

If Aux1 and Aux2 use potentiometers, they will work when connected, but their response will not be 100% linear as there are on-board resistors for 3-position switches that affect the response. For a typical 5K auxiliary potentiometer, the response is within 5% linear, so for most users it is not of concern, but if 100% linear response is desired or the auxiliary pot' is 10K or greater, then the relevant zero-ohm needs to be removed with a fine pointed soldering iron (the position of the Aux1 and Aux2 zero-ohm links are shown in **Error! Reference source not found.** above).

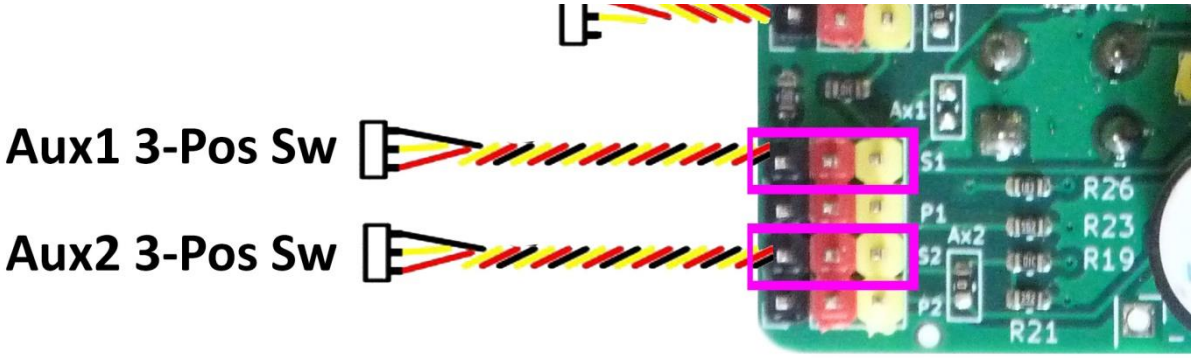

Figure 35. GTB Aux1 and Aux2 Connections for 3-Position Switch

If 3-Position switches are used, no additional resistors are used as they are already fitted on-board the encoder. The while/yellow goes to the switch common (typically the centre terminal) and the red and black to the switch contacts.

Control Switches

Figure 36. GTA Switch Connections

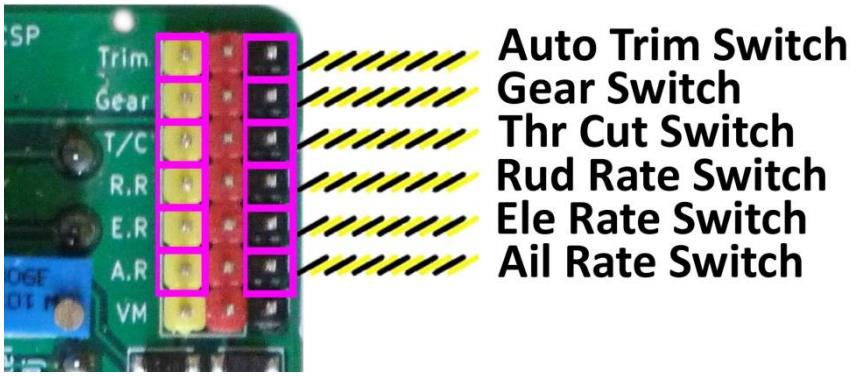

Figure 37. GTB Switch Connections

The Rate/Expo switches, Throttle Cut, Gear and Auto-Trim (re-configured buddy box switch) are connected as show using the black and white/yellow header connections, there is no connection to the red terminal (it switches 0V/negative).

Also note that the order for the rate/expo switches is different for the GTA and GTB boards.

Meter

Most classic transmitters have a meter that originally displayed either battery voltage or rf output. These can be conveniently converted to display battery voltage, with the label covering the LCD display it is the only visible indication of the battery level or indeed that the transmitter is powered.

The voltage/current required to give full scale meter deflection vary between different sets, even from the same manufacturer, but most will work with the provided trimmer potentiometer. The meter circuit also has the choice of a 6.2V or a 6.8V zener diode in series, so that the meter will read zero when the battery voltage reaches 6.2V/6.8V and gives a better indication of the battery left.

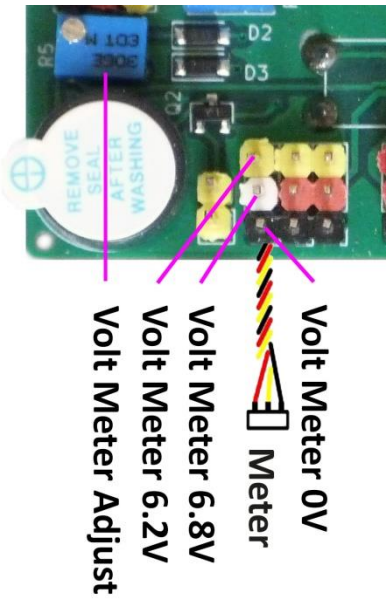

Figure 39. GTA PPM and DSM Connections

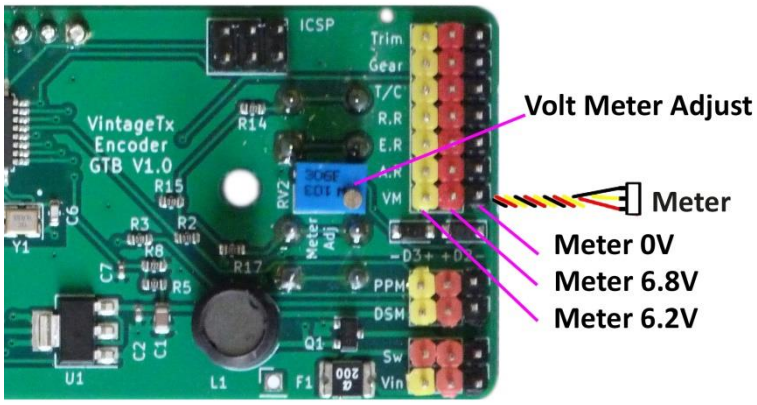

Figure 38. GTB PPM and DSM Connections

Connect the meter to the 0V (black) and either 6.2V connection if a 2S LiPo/Li-Ion /LiFe or 6S NiMH or the 6.8V terminal if a 3S LiFe or 8S NiMH battery is used.

If possible, power the encoder with an adjustable power supply set to the maximum battery voltage or use a fully charged battery and adjust the “Meter Adjust” trimmer to give full scale on the meter.

If the meter goes to full scale, even with the “Meter Adjust” trimmer fully anti-clockwise, then a “shunt” resistor will need to be fitted across the meter terminals, contact support for advice.

PPM connection from Encoder to the 2.4GHz module

Figure 40. GTA PPM and DSM Connections

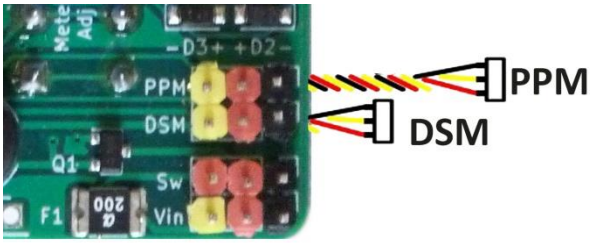

Figure 41. GTB PPM and DSM Connections

The PPM connector needs to be connected to the selected 2.4GHz RF-module:

Black = 0V
Red = +Battery Voltage
Yellow or white = ppm

DSM is for use with a donor module from a Spektrum DX4e/DX5e/DX6i and daughter boards will be made available at a later date.

The 2.4GHz module can be mounted on the optional module mount.

Bind/range check switch (Depending on the module)

Consideration should be given to where to mount the bind/range check switch at this stage. It can be mounted anywhere convenient on the transmitter case. Alternatively most vintage transmitters have multi-pole DIN connectors, originally for charging batteries and/or for buddy-box. This DIN connector can be used to wire the bind/range check switch (and for battery charging), which saves another switch on the case and is just connected when needed. Some 2.4GHz modules have an on-board bind/range test switch which can be used if the rear cover can be quickly and easily be removed from the case.

Mounting the Battery and Provision for charging the battery

If a small, light 2S battery is used (400 – 450mAH), then it's possible that it can be mounted under the optional module mount, though care should be taken that it does not touch any of the circuit components. Otherwise, space will have to be found elsewhere in the case,

Commissioning

Once the encoder is wired up, it can be commissioned and the suggested order is detailed below.

- Adjust **System** settings to suit the installation
- Joysticks and switches operation checked to ensure they are wired correctly and working in the correct direction
- The joysticks gain is adjusted
- Calibrate the joysticks and auxiliary Aux1 and Aux2 channels
- Set the trim alarm set
- Re-calibrate the battery voltage if necessary
- Reset all models to ensure you start with “blank” models with the channels iin the default order

Adjust Settings using the System Menus to Suit your Transmitter Installation

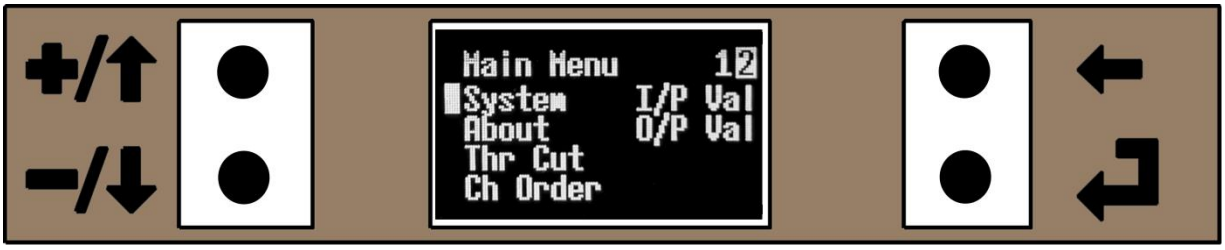

Figure 42. Menu 2 showing the System Menu

The encoder board has been designed to suit various transmitters and modules and the various “System” menus will need to be customised to suit. Full details are in the Encoder User manual, but an abbreviated version is included.

Figure 43. System Menu

Start with the “Other” systems menu.

"Other" System Menu

Figure 44. "Other" System Menu

- Set battery alarm voltage. The minimum voltage needs to be set to suit the battery type used. Suggested values are:

  - 2S Lipo/Li-Ion 7.20V (nominal 20% remaining)
  - 2S LiFe 6.20V (nominal 20% remaining)
  - 6S NiMH 7.10V
  - 3S Lipo 10.80V (nominal 20% remaining)
  - 3S LiFe 9.60V (nominal 20% remaining)
  - 8S NiMH 9.50V

- Set inactivity alarm to suit application (guided free flight may wish to enter a longer time)
- Set if mode 1 (elevator left hand joystick) or mode 2 (right hand joystick)

PPM + Channels Menu

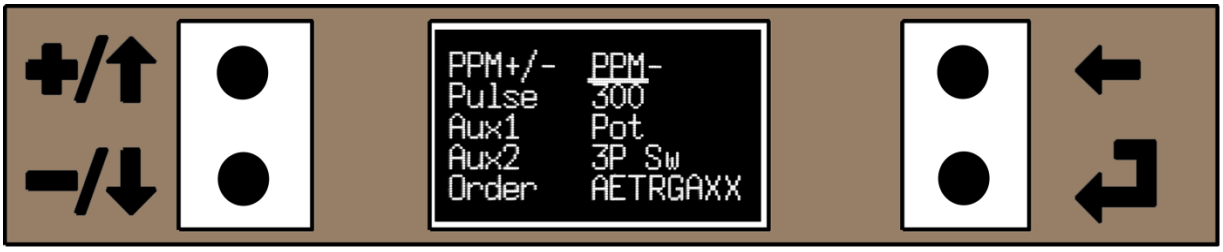

Figure 45. PPM + Channels Menu

- Set ppm polarity (if needed)) – most modules will work with either (Spektrum DM8 and Futaba TM-7 and TM-8 need PPM+, Spektrum DM9 needs PPM-)
- Set "pulse" time (if needed) – most modules work with either 300 or 400 (Spektrum DM9 needs 400)
- Set if Aux1 and Aux2 are potentiometers/sliders or 3-position switches
- Set the default channel order. Note this is the channel order set when a model is reset, but each model memory can have its output channel order individually set with the Channel Order/Assignment menu.

Check Joystick and Auxiliary Potentiometers and Switches have been Wired Correctly

Figure 46. Input Value monitoring menu

When the settings have been set, next check all the joysticks and switch wiring is correct. First ensure the gain trimmer is wound fully anti-clockwise (counter-clockwise).

From the Main Menu 2 go to the" I/P Val" (Input Value) monitoring menu, where the joystick pots' and switches can be checked. Abbreviations are used for all the inputs and are as follows:

- Ail – Aileron
- Ele – Elevator
- Rud – Rudder
- Thr – Throttle
- Aux1 – Auxiliary 1
- Aux2 - Auxiliary 2
- Menu –Menu Switches
- Volt – Battery Voltage
- AR– Aileron Rate Switch
- ER – Elevator Rate Switch
- RR – Rudder Rate Switch
- TC – Throttle Cut Switch
- GR – Gear Switch
- AT –Auto-Trim/Single channel Switch

Move each joystick in turn to make sure that the value varies for the correct channel. If separate electrical trim potentiometers have been fitted, check that these work in the correct direction as well. Next test the Aux1 and Aux2 channels to ensure that their values vary.

Values should increase for right aileron, up elevator right rudder and opening the throttle (and obviously decrease for left aileron, down elevator left rudder and closing the throttle). If both the elevator and throttle channels are reversed check that the "Mode" is set correctly in the settings menu.

Remember that if the Aux1 and/or Aux2 channels are three position switches, they will be read as analogue values just the same as a joystick, not switches, so there values need to vary too, with the lowest value with the switch in position 1, the middle value with the switch in position 2 (the centre) and the highest value with the switch in position 3.

Don't expect the value to vary more than approximately +/-100 from the centre value, they joystick only moves the potentiometer for a small part of its movement. Similarly the auxiliary channels may only vary by approximately 200 for full movement (3 position switch positions 1 to 3).

The status of the rate switches, throttle Cut switch, gear switch and auto-trim switch are shown on the menu by changing the switch to highlighted text when on and normal text when off. In the above the Aileron Rate and Gear switches are in the "ON" position, the other switches are "OFF".

Press the ← key for 3 seconds to return to the Main Menu 2. The 3 second delay when exiting the menu is intentional so as to give you time to read the analogue value when the back key is pressed (the Menu keys are all connected to the same analogue input) and is not a programming bug.

Joystick gain

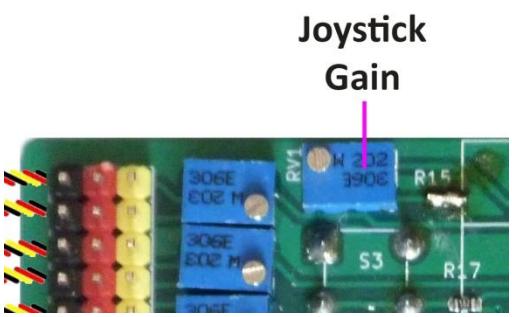

Figure 47. GTA Encoder Board

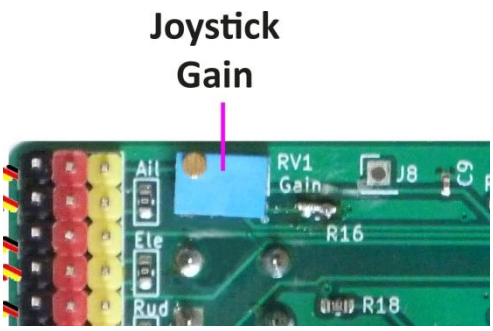

Figure 48. GTB Encoder Board

Most vintage transmitter joysticks used ordinary commercial/industrial potentiometers that have around 300° rotation, but the joystick mechanism only moves the potentiometer through approximately 60° rotation, so you only get 20% movement of the potentiometer. With the 5V supply to the joystick you get around 1.0V swing (typically from around 1.0V to 2.0V on older sets and 2.0V to 3.0V on later sets which had the Signetics NE5044 encoder). The encoder boards have an ADC (analogue to digital converter) with a resolution of 1024 steps, so with a 1V swing you have a resolution of approximately 205. The VintageTx encoders have an adjustable gain for the joysticks to increase the measured voltage and hence the resolution. By default the encoder boards are supplied with the gain at a minimum (gain trimmer wound fully anti-clockwise) so it's suitable for all joysticks, but the majority of transmitters can have the gain increased.

Setting up:

- Ensure the gain potentiometer is fully anti clockwise (minimum gain).
- Power up the encoder, the LCD should display the homepage with the backlight on.
- Open the main menu, go to the second menu page and select the "I/P Values" menu.
- Move each joystick control and Aux control in turn to the maximum, including the trim, to see which control attains the highest value. The control with the highest value will be used to set the overall gain.
- If one (or both) of the auxiliary channels value is near double of the joystick channels, you may need to reverse the black/red wiring to the auxiliary potentiometer.
- Move and hold the control with the maximum value to full movement (including full trim). Slowly turn the gain potentiometer clockwise. You should see the value of the control increasing.
- Keep turning the "Joystick Gain" potentiometer until the value reaches 1015. You do not need to keep looking at the display as when this value is reached, the sounder will emit a continuous beep.
- Move all the joysticks (with trims) and the auxiliaries Aux1 and Aux2 (if fitted) to their maximum movements to ensure no control exceeds 1015 (and start the sounder), you don't want any channels reaching a value of 1023 and "saturating".
- Most transmitters can finish with a resolution of between 300 and 512, which is adequate for most users. In the mid '80s, several world championships were won using PCM sets with 256 step resolution and any resolution above 1024 is only needed for marketing and publicity, not flying.
- After increasing the gain the battery voltage may also need recalibrating.

Calibrate the Joysticks

Figure 49. Calibrate Joystick menu that set the Joystick Centres/Neutrals

When the transmitter is first used, the joysticks will need calibrating, so the encoder knows the limits of movement and joystick neutral positions (centres).

To access the Joystick Calibration:
Home Menu -> Main Menu 2 -> Settings -> Cal Joystick

Figure 50. Joysticks with trims in the centre, Throttle Joystick closed and its trim up (Mode 1 throttle Right)

Figure 51. First Stage with Joysticks with trims in the centre, Throttle Joystick closed and it's trim up (Mode 2 throttle left)

In the first stage, the joystick centres are set (with the trims centred), except the throttle joystick where the joystick should be closed (down position) but the trim up (as Figure 49 for Mode 1 transmitters and Figure 50 for Mode 2 transmitters). If a three position switch has been connected to Aux1 and/or Aux2 then it needs to be in the centre position too. The menu text as in acts as a reminder. Once the joysticks and switches are set in position press the ↵ key.

Figure 52. The Second Calibrate Joystick Menu - Where all Joysticks and Trims are moved to their limits

The second stage of calibrating the joysticks (with the second Joystick Calibration menu displayed as in Figure 51), both joysticks and trims should be moved to their limits, with the trims being moved in the same direction as the joystick is being moved (as in Figure 52 below).

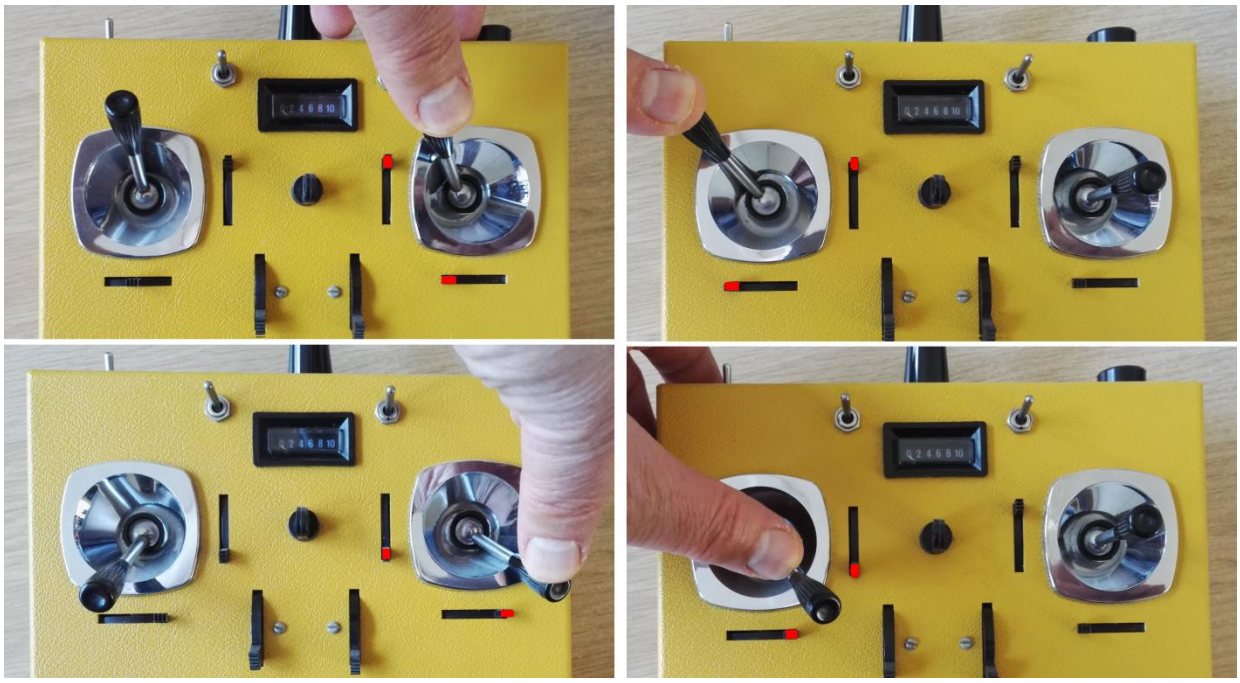

Figure 53. Joysticks and the trims being moved to their limits

Once all the joysticks and trims and the Auxiliary channels Aux1 and Aux2 have been moved to their limits re-centre all joysticks and trims, shut the throttle joystick with its trim up and centre any 3-position switch then press the ↵ key to save the settings to EEPROM and the menu will automatically revert to the System menu to confirm that the calibration is complete.

It's very important to re-centre the aileron, elevator and rudder joysticks and shut the throttle with the trim up at the end of the second stage of calibration as an average is taken of the joystick centre positions from the first stage and the end of the second stage of calibration. The reason is that many vintage joysticks do not re-centre very accurately, especially closed gimbal joysticks and taking the average of the two "centres/neutrals give a better representation of the neutrals/centres.

To cancel the calibration process, press the ← key at any time during calibration to return to the System menu without the values being saved to EEPROM.

Set Trim Alarm

Figure 54. Trim Alarm

When the encoder powers on or when a different model is to be selected, the joystick trims are checked to ensure they are in the centre. This works by comparing the present position with the centre calibration values stored in EEPROM when the joysticks were calibrated. This setting allows you to adjust how far from centre the joystick trims have to be before an alarm. The default setting is 15uS which is OK for most sets.

The “Trim Alarm” needs to be set to alarm when the trims are not centred but high enough not to have false alarms. You need as low a value as possible, without getting repeated false alarms. The complete trim range is typically +/-100uS so 15uS is around one “click” from centre for many transmitters. The current values from centre for the Ail, Ele and Rud are displayed for information

The reason the setting is adjustable is some old designs of joystick or badly worn joysticks do not return accurately to centre (they centre to 1500uS +/- 35us so the alarm needs to be set at 40uS), while some later open gimbal joysticks return to centre very accurately (1500uS +/-5uS so the alarm value can be reduced to 10uS).

If you wish to disable the Trim Alarm, set it to the maximum setting of 127uS which should be greater that the trim is capable of, so the alarm will never sound.

Reset All Models

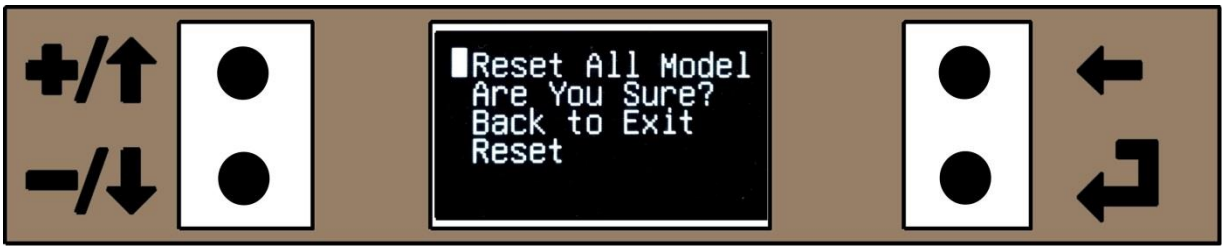

Figure 55. Reset All Models Menu

When everything set, use the "Reset All Models" menu to start with the selected default channel order/assignment.

Home Menu -> Menu 1 -> Models -> All Model Delete

Move the cursor down using the -/↓ key to the "Reset" row. The message "Ent & Hold 2S" will be displayed. Press and hold the ↵ key for 2 seconds and there will be a few second delay while everything is set to default and saved to non- volatile EEPROM. Once complete it returns to the Models menu.

Figure 56. All Model Reset Menu with cursor at Reset.
Press ↵ key for 2 seconds to reset all models to their default values.

Check the PPM output with a PPM Meter, Logic Analyser or Oscilloscope

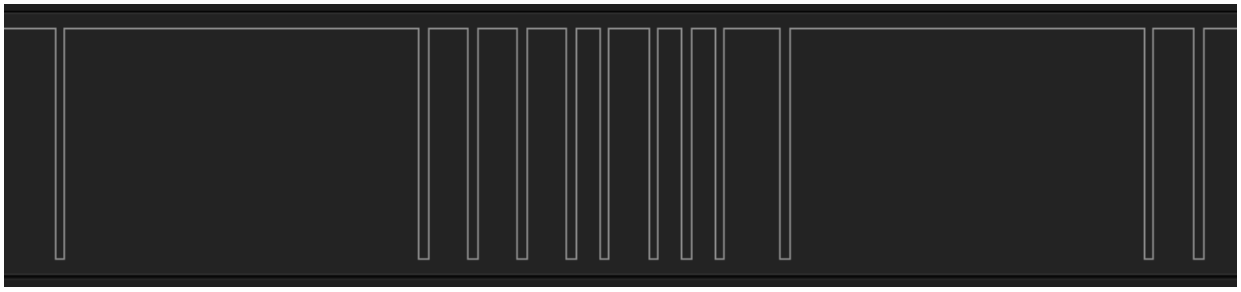

Figure 57. Typical PPM Signal

If you have access to a ppm meter, oscilloscope or logic analyser, it makes sense to test it first with test equipment, to ensure that the correct signal is being output. If the correct ppm is being output then you can be confident when connecting to a 2.4GHz module that the encoder is working and any issues encountered is with the module or binding the receiver.

Test with the 2.4GHz Module

With the module connect you can bind and test with a receiver. Do not forget to do a “Range Check” with the transmitter and if space permits, do a full range check, obviously with the normal safety precautions (no electric motor connected etc).

Other Documents

Once the conversion is completed, the is a “Quick Start Guide” outlining the basics of the VintageTx operation and a full “Users Manual” detailing every function of the encoder and programming examples for the mixing, channel order/assignment and single channel emulation.